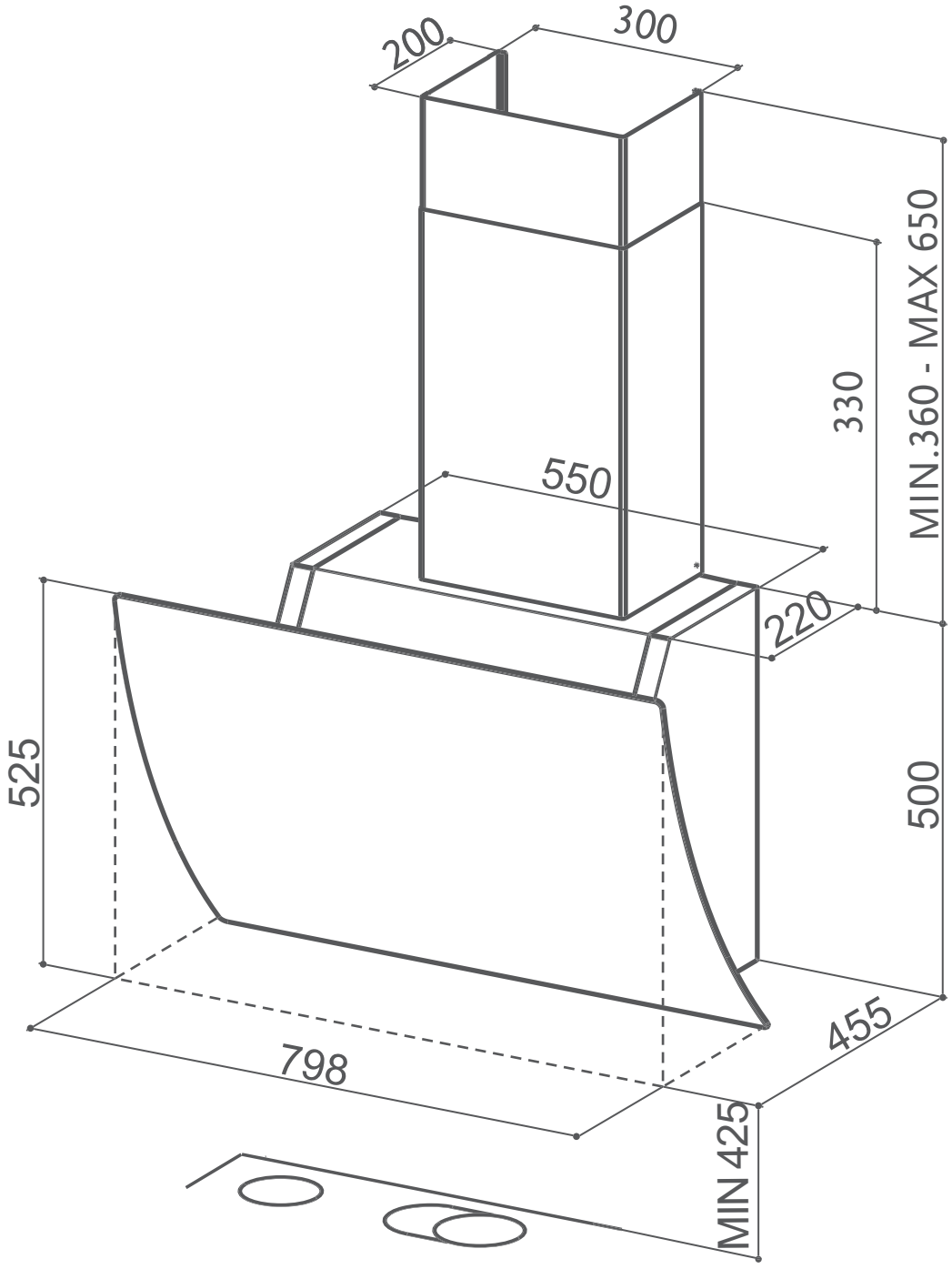

Versus